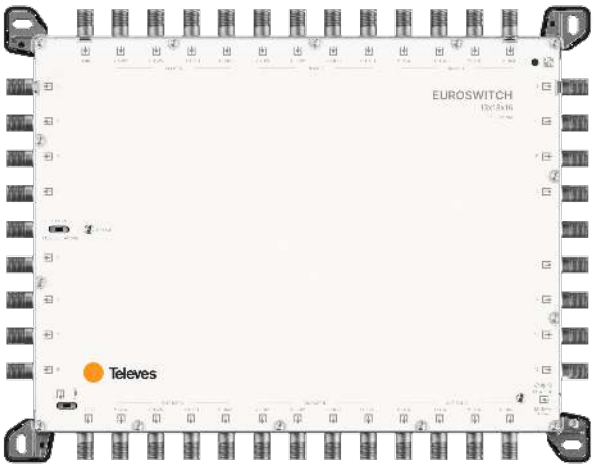

EuroSwitch 13 inputs - 16 outputs

Compact and effective for large installations

Compact multiswitch equipped with 13 inputs (one terrestrial and 12 for three satellites, each with its four polarities) and 16 user outputs.

Thanks to its great compactness and its optimized electronic design, it presents very low through and tap losses. This reduces the number of amplifiers needed in the cascade and to obtain a better balanced signal in the users, even in large collective installations.

It can be used as a terminal (star topology) or as a cascade by using a simple switch. In addition, it incorporates a second switch that actives the TForce technology, which automatically adjusts the terrestrial signal and keep it constant despite variations in the reception.

RED compliant

Ref.	719703
Logical ref.	MSE1316C
EAN13	8424450317952

Packaging info	
Box	1 pcs.

Physical data	
Net weight	1,006.00 g
Gross volume	4.70 dm³
Gross weight	1,214.00 g
Width	280.00 mm
Height	215.00 mm
Depth	30.00 mm
Main product weight	1,006.00 g

Highlights

- Very compact in dimensions and weight, even in models with high number of users

- Very low through and tap losses
- High shielding (A class) thanks to its manufacture in Zamak
- Versatile: selector switch to shift between cascade and terminal modes
- Great isolation between inputs and outputs
- Equipped with the TForce technology, the terrestrial output level is automatically adjusted (TERR. AMP. ACTIVE) to the optimal level
- Two powering options: From the power supply, or from the cascade through the satellite inputs or outputs
- Low consumption under normal conditions. In addition, ECO mode reduces consumption as the number of connected users decreases
- Wide 12-18V power supply range, making it compatible with most existing systems
- Current circulation between all inputs and cascades
- 100% european design, quality, and manufacturing

Mounting details

Optimize installation and organize cabling cleanly thanks to the included spacers. Their installation adds a 15 mm clearance from the wall to easily route cables behind the device.

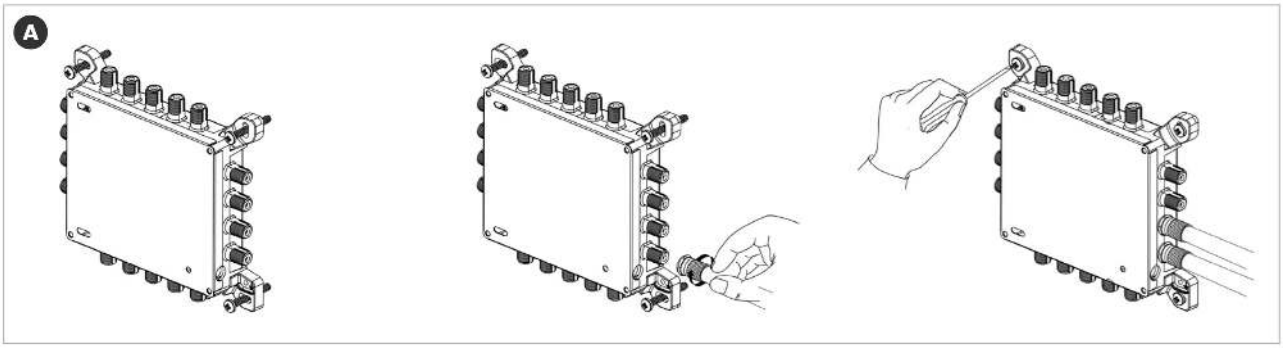

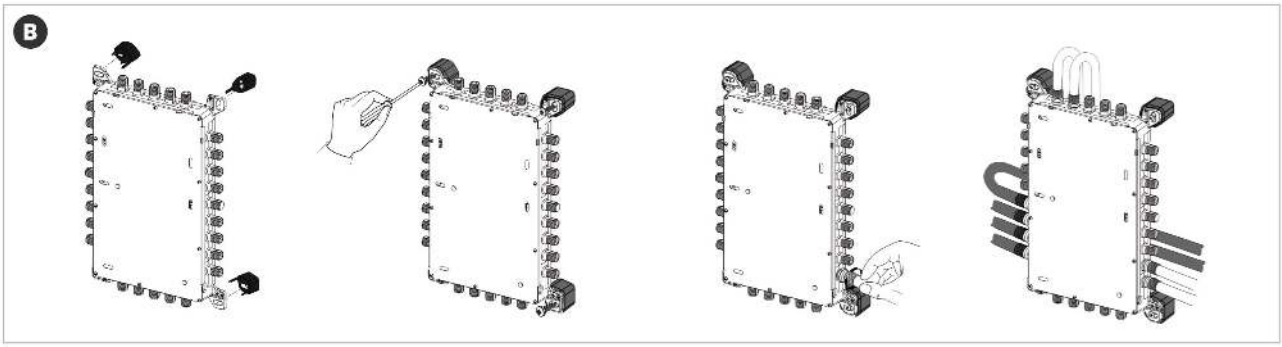

Technical specifications

Ref. 719703

Number of inputs		13
Number of cascadable outputs		13
Number of user outputs		16
Frequency range TERR.	MHz	88 ... 862
Frequency range SAT.	MHz	950 ... 2400
Input level TERR.	dBmV	20 ... 50
Input level SAT.	dBmV	5 ... 52
Through losses TERR.	dB	< 4
Through losses SAT.	dB	2 ... 3.5
Tap losses TERR. Active	dB	0
Tap losses TERR. Passive	dB	32
Tap losses SAT.	dB	2 ... 7
Output level 10Ch DVB-T	dBmV	18
Isolation H/V	dB	> 50
Isolation users	dB	> 30
Powering	Vdc	12 ... 18
Max. current (PSU - TERR ACT.)	mA	115
Max. current with loaded outputs (PSU - TERR ACT.)	mA	170
Max. current (PSU - TERR PAS.)	mA	5
Max. current with loaded outputs (PSU - TERR PAS.)	mA	60
Max. current (STB)	mA	85
Operating temperature	°F	23 ... 113
Protection index (IP)		20